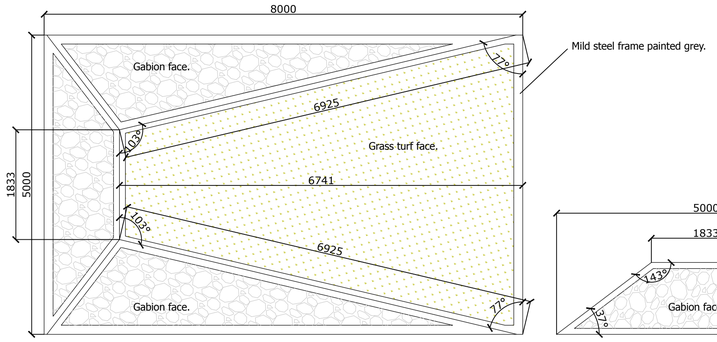

01a. Berm Type 1. Plan, Scale 1:50

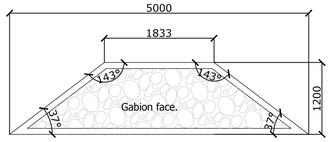

01b. Berm Type 1. Front, Scale 1:50

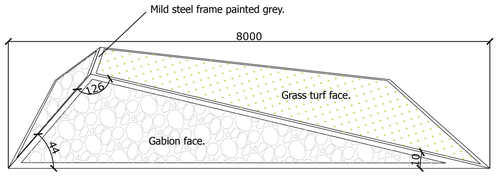

01c. Berm Type 1. Axonometric view, Scale 1:50

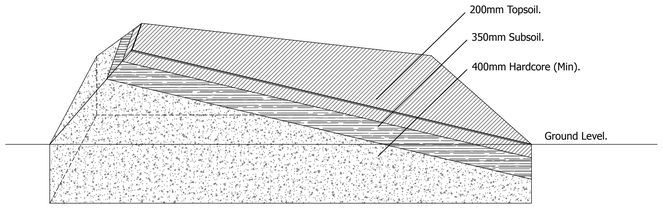

01d. Berm Type 1. Axonometric view of build up layers Scale 1:50

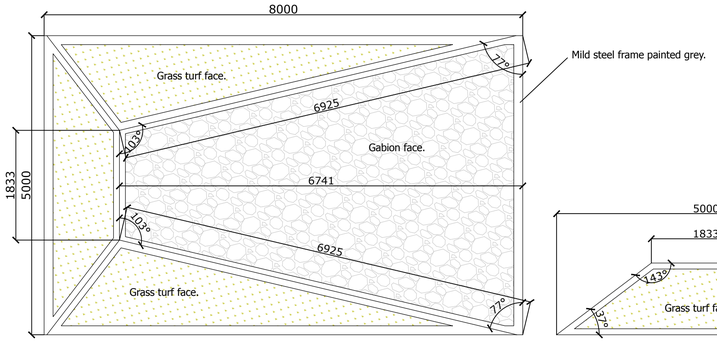

02a. Berm Type 2. Plan, Scale 1:50

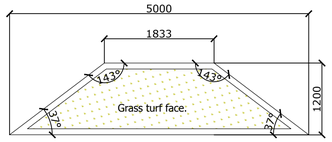

02b. Berm Type 2. Front, Scale 1:50

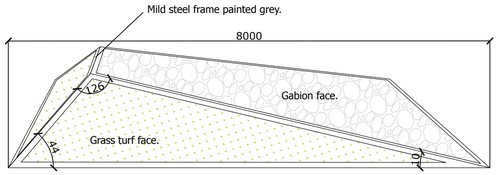

02c. Berm Type 2. Axonometric view, Scale 1:50

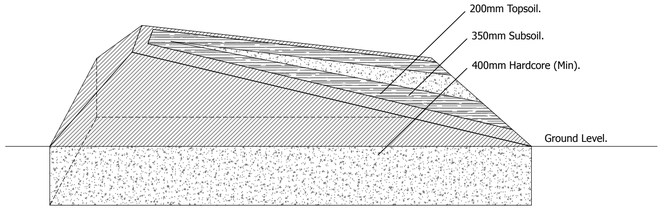

02d. Berm Type 2. Axonometric view of build up layers Scale 1:50

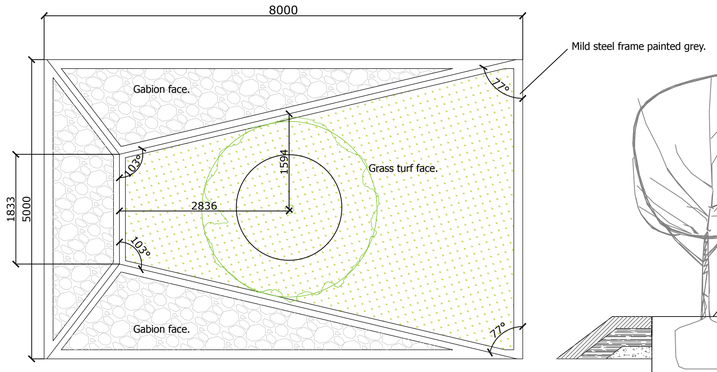

03a. Berm Type 3. Plan, Scale 1:50

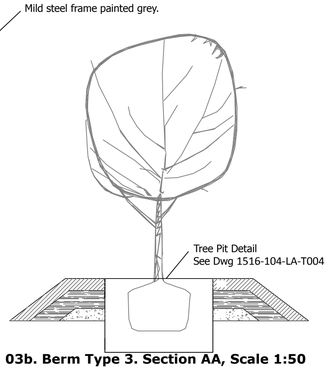

03b. Berm Type 3. Section AA, Scale 1:50

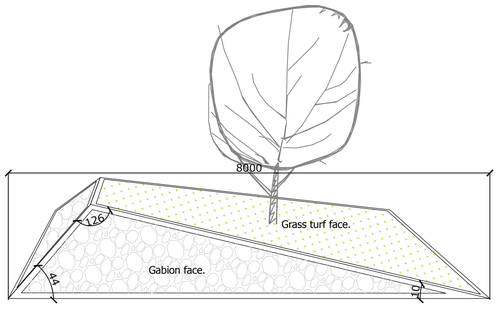

03c. Berm Type 3. Axonometric view, Scale 1:50

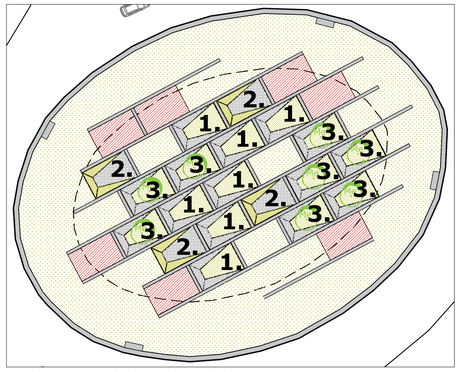

Halfway roundabout plan with Berm Types.
Scale 1:500

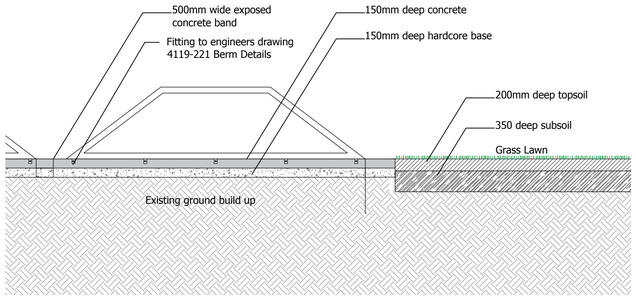

04a. Concrete Band/Frame Fixing Detail , Scale 1:50

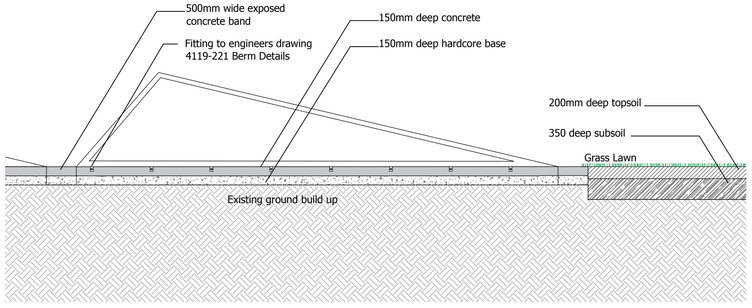

04b. Concrete Band/Frame Fixing Detail , Scale 1:50

Notes:

-Berm constructed with hardcore to base/core laid in 200mm consolidated layers with 350mm subsoil, turfed faces to be topped with 200mm good quality topsoil (to BS 3882). See Detail 01d & 02d
-Welded mesh/Stone facing to berms to be constructed using Galfan coated welded mesh, wire diameter 3mm, mesh spacing 50mm x 50mm, to be secured with galvanized gabion clips. Faces to be 100mm deep, length and width to vary with face as shown. Gabions to be filled with 50-70mm dark grey, clean cut stone, from local source to be approved by LA.
-Grass faces to Berms to be turfed using 19mm deep 'standard' lawn turf supplied by KMC lawn turf or similar and approved.
-Berm frame constructed using mild steel beams, 100mm wide x 6mm deep x length to vary as shown. All welds and fittings to be internal. Frame to be finished using Epigrip C400 Epoxy Phosphate Primer/Buildcoat and Martime grade paint such as Leighs EPIGRIP
K267HS (RAL7023 Concrete Grey) or similar and approved.
-Frame to sit evenly on top of grass and gabion faces with frame secured to concrete base using steel lugs and bolt fittings, to enginneers specification, frame to sit flush with ground level.
-Concrete parameter stripe foundation for berm to lenght and width of berm frame, 150mm deep with 150mm hardcore base layer, see engineers drawing 4119 -221.
-Concrete bands to be 500mm wide, 150mm deep with 150mm hardcore base layer, to engineers specification. Concrete to be poured at the later stages of construction to avoid damage by construction traffic.
-All steel fabrication and erection to be carried out in accordance with the National Structural Steelwork Specification for Building Construction.
-All steel to be fabricated, supplied & erected in accordance with BS449 & BS5950.
-All connections, welding, etc to be in accordance with the relevant British Standard Code of Practice.
-A minimum of 14 working days before fabrication, a complete set of detailed fabrication & / or erection drawings and calculations shall be submitted to the LA for approval.
-Fabricator to ensure that all edges have a 2-3mm radius and welds are ground down to prevent any sharp edges.
-The steel fabricator shall ensure that all steel components have suitable lifting points for erection and that craneage is adequate
and provide any necessary temporary bracing required for erection purposes.
-No welding to be carried out on site unless agreed in advance with the National Roads Authority and subject to safety measures being agreed.
-All steelwork to be Blast Cleaned to Sa 2.5 of BS 7079: part A1 : 1989. Surface profile to be within the range 30-75 microns typical.

-Drawing to be read in conjunction with:
Documents: 1516-Specification, 1516-Preliminaries, 1516-104-SOW
Landscape Drawings: 1516-104-LA-T001 Site Location Plan, 1516-104-LA-T002 Landscape Layout, 1516-104-LA-T003 Berm details, 1516-104-LA-T004 Planting plan and details.
Engineers Drawings: 4119-221 Berm Details
-Any discrepancies regarding measurements, finishes and levels are to be highlighted by contractor prior to commencement on site.
-Measurements on drawings are indicative, contractor to check all measurements prior to fabrication to provide information in relation to berm and frames
-Any errors or contradictions between drawings/specification/schedule of works to be highlighted by contractor before tender submission.
-Site to be surveyed by contractor to obtain levels information prior to commencement of works. All levels given in relation to works to be taken from local ground level.
-Do not scale from drawing.

THIS IS NOT FOR CONSTRUCTION

This drawing is the copyright of the Landscape Architect unless otherwise stated. all dimensions are in millimeters. Where dimensions are not given, drawings must not be scaled and the matter must be referred to the Landscape Architect. If the drawing includes conflicting details/dimensions the matter must be referred to the Landscape Architect. All dimensions must be checked on site. The Landscape Architect must be informed, by the contractor, of any discrepancies before work proceeds.

Cathal O'Meara
Landscape Architects
087 9202549
Showgrounds, Fermoy
Co. Cork

Chartered member of the Irish Landscape Institute

Client: Cork Co. Co.

Project: Halfway, Roundabout

Drawing: Berm details

Date: 11 July 2017

Drawn By:
Wendy Kirkpatrick

Issue: Tender

Dwg No:
1516-104-LA-T003

cathal meara landscape architects

N

Scale 1:50, 1:500@ A1